Lecture 29

Continuous joint distributions

Uniform distributions

Examples

Joint densities

Joint distribution functions

Marginal densities

Joint distributions

Joint distribution	$P\{(X,Y) \in A\}$	$A \subset \Re^2$
Marginal distributions	$P\{X \in A\}$	$A \subset \Re$
	$P\{Y \in B\}$	$B \subset \Re$
Conditional distributions	$P\{X \in A \mid Y = y\}$	$A \subset \Re, \quad y \in \Re$
	$P\{Y \in B \mid X = x\}$	$B \subset \Re, \quad x \in \Re$

- For "densities" rather than "distributions", replace A and B by dx and dy, throughout.

Uniform distributions

- $(X,Y) \sim U(D) \iff P\{(X,Y) \in A\} = |A|/|D|, \quad A \subset D$
- If $X \sim U(I_1)$ and $Y \sim U(I_2)$ are <u>independent</u>, then $(X,Y) \sim U(I_1 \times I_2)$.
- Special case: If $X \sim U([0,a])$ and $Y \sim U([0,b])$, then $(X,Y) \sim U([0,a] \times [0,b])$. Since, for any <u>rectangle</u> $A \times B$,

$$
\begin{aligned}
&P\{(X,Y) \in A \times B\} \\
&= P\{X \in A,\ Y \in B\} \\
&= P\{X \in A\}\ P\{Y \in B\} \\
&= \frac{\text{Length}(A)}{a} \cdot \frac{\text{Length}(B)}{b} \\
&= \frac{\text{Area}(A \times B)}{ab}
\end{aligned}
$$

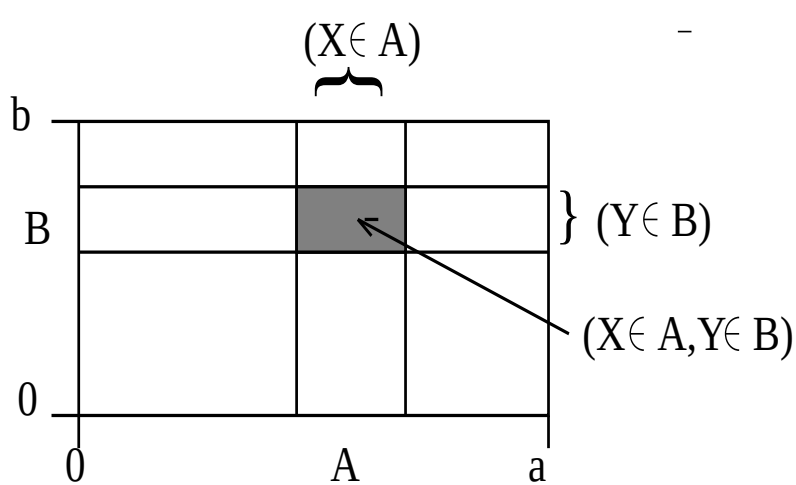

Examples

- Take $X \sim U[0,1]$ and $Y \sim U[0,1]$, independent.
- Find $P\{X^2 + Y^2 \leq 1\}$.
- By area computations

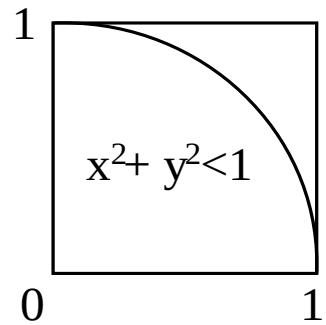

$$P\{X^2 + Y^2 \leq 1\} \;=\; \frac{\pi}{4}$$

- Find $P\{X^2 + Y^2 \leq 1 | X + Y > 1\}$.
- By area computations

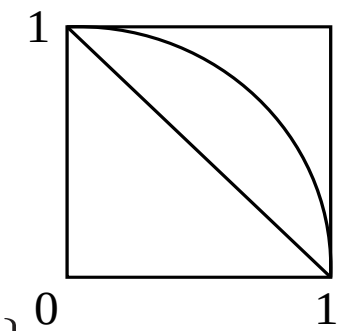

$$\begin{aligned} & P\{X^2 + Y^2 \leq 1 | X + Y > 1\} \\ &= \frac{P\{X^2 + Y^2 \leq 1,\; X + Y > 1\}}{P\{X + Y > 1\}} \\ &= \frac{\pi/4 - 1/2}{1/2} \;=\; \frac{\pi}{2} - 1 \end{aligned}$$

The meeting problem

- Two people try to meet at a certain place between 5:00pm and 5:30pm. Each, independently of the other arrives at a time randomly chosen in this time interval, and waits for the other at most 5 minutes.
- What is the probability that they meet?

- Take X and Y as fractions of the 30
. minute interval.
- Then X and Y are independent $U[0,1]$.
- Therefore

Probability of meeting = Inner area

$$= 1 - \left(\frac{5}{6}\right)^2 = \frac{11}{36}$$

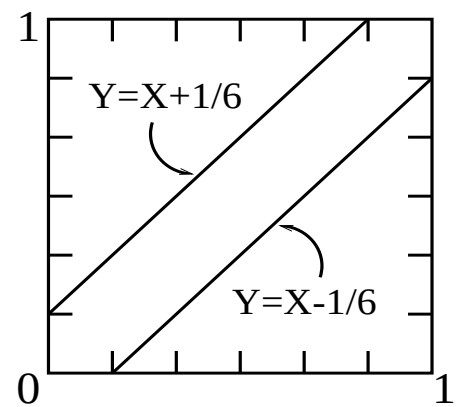

Uniform distribution over a volume

- Let D be the n-dimensional box

$$D \;=\; [a_1, b_1] \times [a_2, b_2] \times \cdots \times [a_n, b_n]$$

with n-dimensional volume

$$(b_1 - a_1) \times (b_2 - a_2) \times \cdots \times (b_n - a_n)$$

- Take $X_1 \sim U[a_1, b_1], \ldots, X_n \sim U[a_n, b_n]$, independent.

- Then $\hat{X} \equiv (X_1, X_2, \ldots, X_n)$ is a random variable, uniformly distributed on D. i.e.

$$P\{\hat{X} \in A\} \;=\; \frac{\text{Volume}\,(A)}{\text{Volume}\,(D)}, \qquad \text{for all } A \subset D.$$

Joint densities

- We start with two continuous random variables, X and Y.
- We are looking for a function f_{XY}, of two variables, that has the following properties:

◦ $f_{XY}(x, y) \geq 0$, for all $(x, y) \in \Re^2$.

◦ $\int_{-\infty}^{\infty} \int_{-\infty}^{\infty} f_{XY}(x, y)\, dxdy \;=\; 1.$

◦ For every set $A \subset \Re^2$,

$$P\{(X, Y) \in A\} \;=\; \int_A f_{XY}(x, y)\, dxdy$$

A density over the triangle $0 < x < y < 1$

FIGURE 1. A joint density surface. Here a particular joint density function given by the formula $f(x,y) = 5!\,x(y-x)(1-y) \qquad (0 < x < y < 1)$, is viewed as the height of a surface over the unit square $0 \le x \le 1, 0 \le y \le 1$. As explained later in Example 3, two random variables X and Y with this joint density are the second and fourth smallest of five independent uniform $(0,1)$ variables. But for now the source and special form of this density are not important. Just view it as a typical joint density surface.

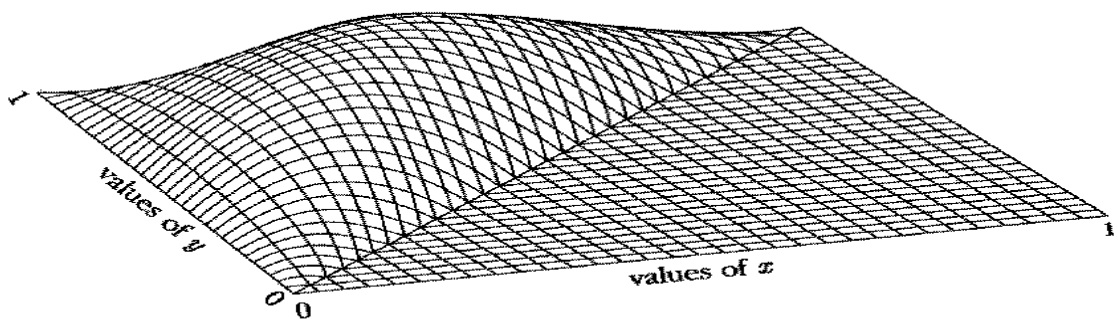

FIGURE 2. Volume representing a probability. The probability $P(X > 0.25 \text{ and } Y > 0.5)$, for random variables X and Y with the joint density of Figure 1. The set B in this case is $\{(x,y) : x > 0.25 \text{ and } y > 0.5\}$. You can see the volume is about half the total volume under the surface. The exact value, found later in Example 3, is $27/64$.

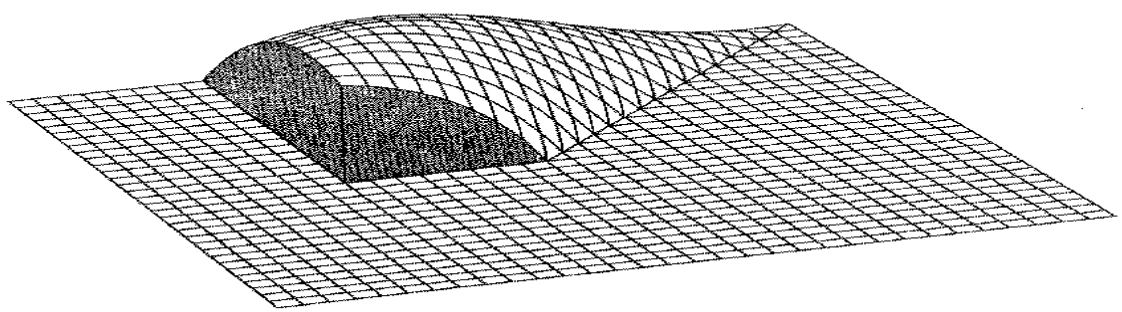

Joint distribution function:

$$F_{XY}(x, y) \equiv P\{X \leq x, Y \leq y\}$$

- $F_{XY}(x, y)$ is defined for <u>all</u> $-\infty < x, y < \infty$.
- For fixed x, $F_{XY}(x, y)$ is an non-decreasing function of y.
- For fixed y, $F_{XY}(x, y)$ is an non-decreasing function of x.
- $F_{XY}(-\infty, y) = F_{XY}(x, -\infty) = F_{XY}(-\infty, -\infty) = 0$
- $F_{XY}(\infty, \infty) = 1$
- $F_{XY}(x, \infty) = F_X(x)$, the <u>marginal</u> DF of X.
- $F_{XY}(\infty, y) = F_Y(y)$, the <u>marginal</u> DF of Y.

$$
\begin{aligned}
&F(x+dx, y+dy) \\
&\quad \equiv \; P\{X \le x+dx,\; Y \le y+dy\} \\
&\quad = \; P\{(X,Y) \in \text{one of the 4 regions}\} \\
&\quad = \; P\{1\} + P\{2\} + P\{3\} + P\{4\} \\
&\quad = \; F(x,y) \\
&\qquad + \; F(x, y+dy) \; - \; F(x,y) \\
&\qquad + \; F(x+dx, y) \; - \; F(x,y) \\
&\qquad + \; P\{X \in (x, x+dx),\; Y \in (y, y+dy)\}
\end{aligned}
$$

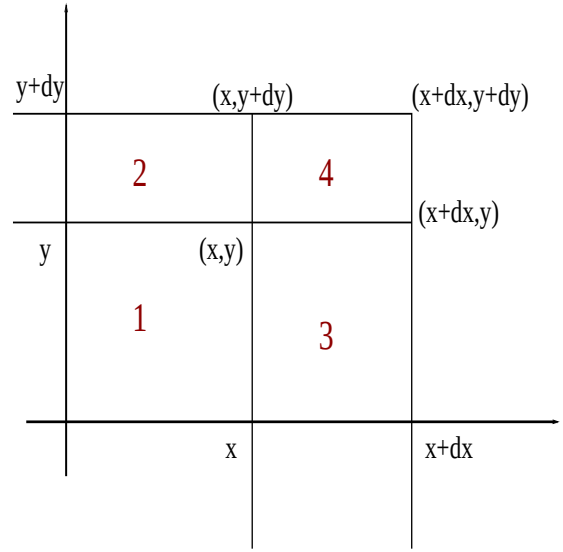

- Rearranging gives a basic equation and inequality

$$
\begin{aligned}
&P\{X \in (x, x+dx),\; Y \in (y, y+dy)\} \\
&= F(x+dx, y+dy) \; - \; F(x, y+dy) \; - \; F(x+dx, y) \; + \; F(x,y) \\
&\ge 0
\end{aligned}
$$

Distribution functions and density functions

- The definitions are:

$$
\begin{aligned}
F_{XY}(x,y) &\equiv P\{X \le x, Y \le y\} \\
P\{(X,Y) \in A\} &= \int_A f_{XY}(x,y)\, dxdy \\
\Rightarrow \qquad F_{XY}(x,y) &= \int_{-\infty}^{x}\int_{-\infty}^{y} f_{XY}(u,v)\, dudv \\
\Rightarrow \qquad f_{XY}(x,y) &= \frac{\partial^2}{\partial x \partial y} F_{XY}(x,y)
\end{aligned}
$$

and $\quad P\{X \in dx, Y \in dy\} = f_{XY}(x,y)\, dxdy$

Working with infinitessimals in the plane

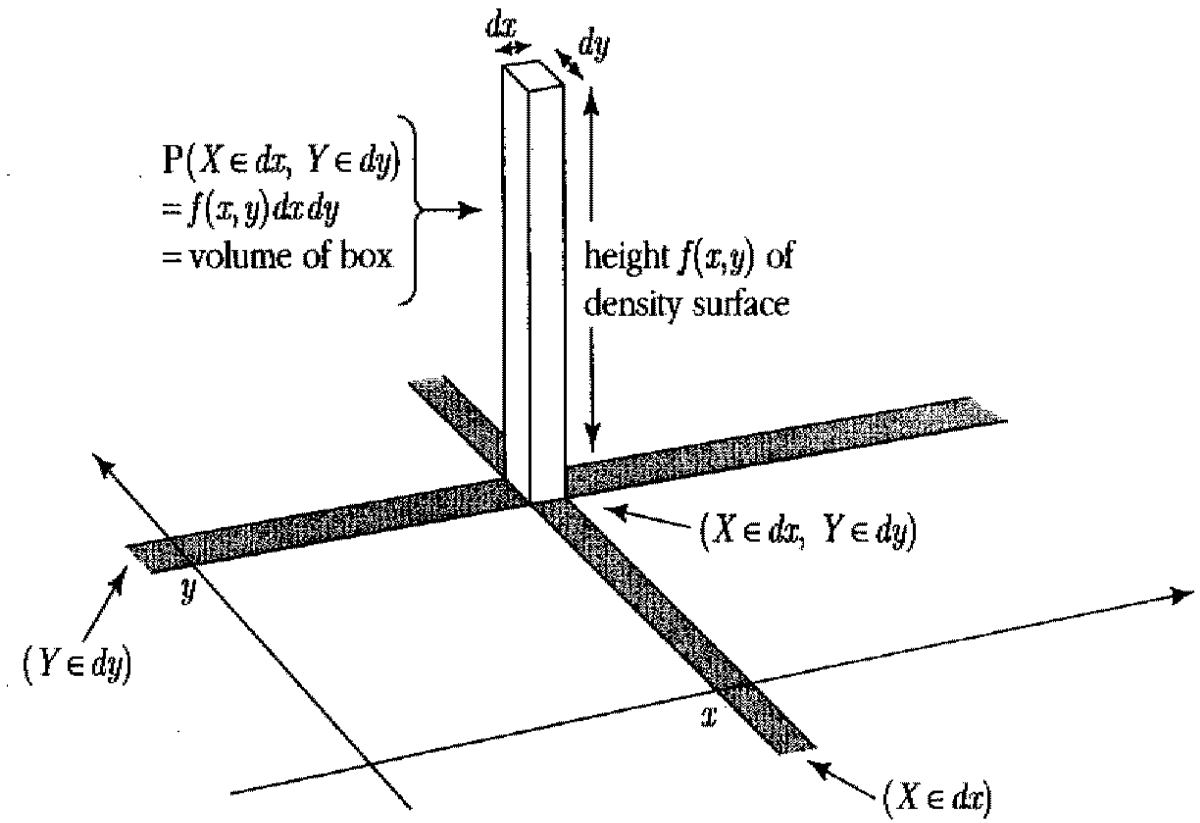

Marginal densities

- Since

$$
\begin{aligned}
F_X(x) &= \int_{-\infty}^{x} f_X(u)\ du \\
\text{and} \qquad F_X(x) &= F_{XY}(x, \infty) \\
&= \int_{-\infty}^{x} \int_{-\infty}^{\infty} f_{XY}(u, v)\ du dv \\
&= \int_{-\infty}^{x} \left(\int_{-\infty}^{\infty} f_{XY}(u, v)\ dv \right)\ du
\end{aligned}
$$

we now get

$$\boxed{f_X(x) = \int_{-\infty}^{\infty} f_{XY}(x, y)\ dy}$$

and

$$\boxed{f_Y(y) = \int_{-\infty}^{\infty} f_{XY}(x, y)\ dx}$$

Discrete/Continuous summary table

Handed out in class!